MAXEN ELECTRONICS LIMITED

Email: melody.xia@maxen-lcddisplay.com Http://www.maxen-lcddisplay.com

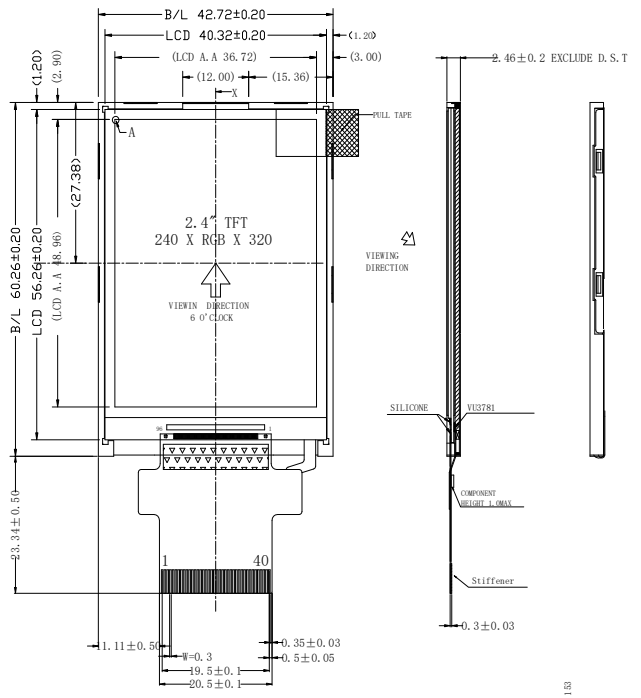

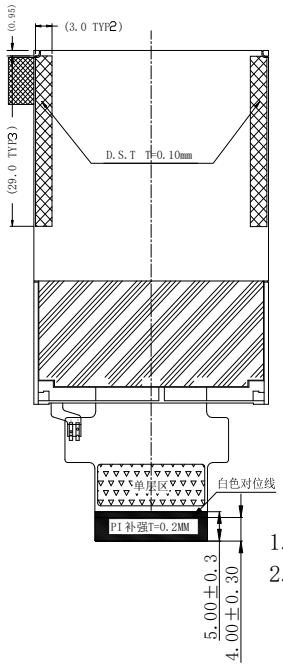

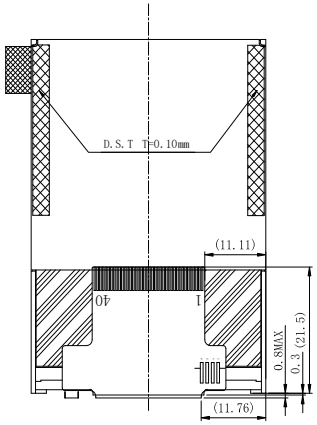

AFTER FPC BENDING
(FOR REFERENCE)

PIN NO	Symbol
1	NC
2	DB1
3	DB2
4	DB3
5	DB4
6	GND
7	IOVCC
8	CS
9	RS
10	WR
11	RD
12	IM0
13	XR
14	YD
15	XL
16	YU
17	LEDA
18	LEDK1
19	LEDK2
20	LEDK3
21	LEDK4
22	NC
23	DB5
24	DB10
25	DB11
26	DB12
27	DB13
28	DB14
29	DB15
30	DB16
31	DB17
32	RESET
33	VCI
34	IOVCC
35	GND
36	DB6
37	DB7
38	DB8
39	TE
40	NC

1. 高8位兼容16位
2. IM3,IM2,IM1依次是100，MIO是直接拉出来

FPC展开出货

NOTES:
1. GENERAL TOLERANCE: ±0.2
2. ( )REFERENCE DIMENSION
3. ROHS must be complied

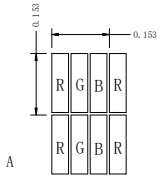

Pixtel Detail

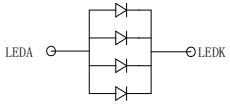

LED CIRCUIT DIAGRAM
2.8-3.5V@60mA

Display Type	TFT TRANSMISSIVE,POSITIVE
Optimum Viewing Direction	6 O'CLOCK
Upper Ploarizer Type	Anti-Glare
LCD Driver IC	ST7789
Operating Voltage	VCI=2.8V; IOVCC=1.8V/2.8V
Operation Temperature	-20 ℃ TO 60 ℃
Storage Temperature	-30 ℃ TO 70 ℃
Interface	16BIT MCU
Backlight	4-CHIP WHITE LED
Surface luminance	250cd/m2 (TYP.)
White X/Y	——

VER.	SYMBOL	AMENDMENT	SIGN	DATE
V00.		First issue		2021.04.01

DRAWN	
ME. CHECKED	
EE. CHECKED	
APPROVED	
CUSTOMER'S APPROVAL	

TITLE: MODULE SPEC.

DRAWING NO. MX-024NM40CMS-N06

UNIT	mm	SCALE	FIT
3rd Angle		SHEET	0F 1

MAXEN ELECTRONICS LIMITED