客户签名:

日期:

Front View Side View Back View

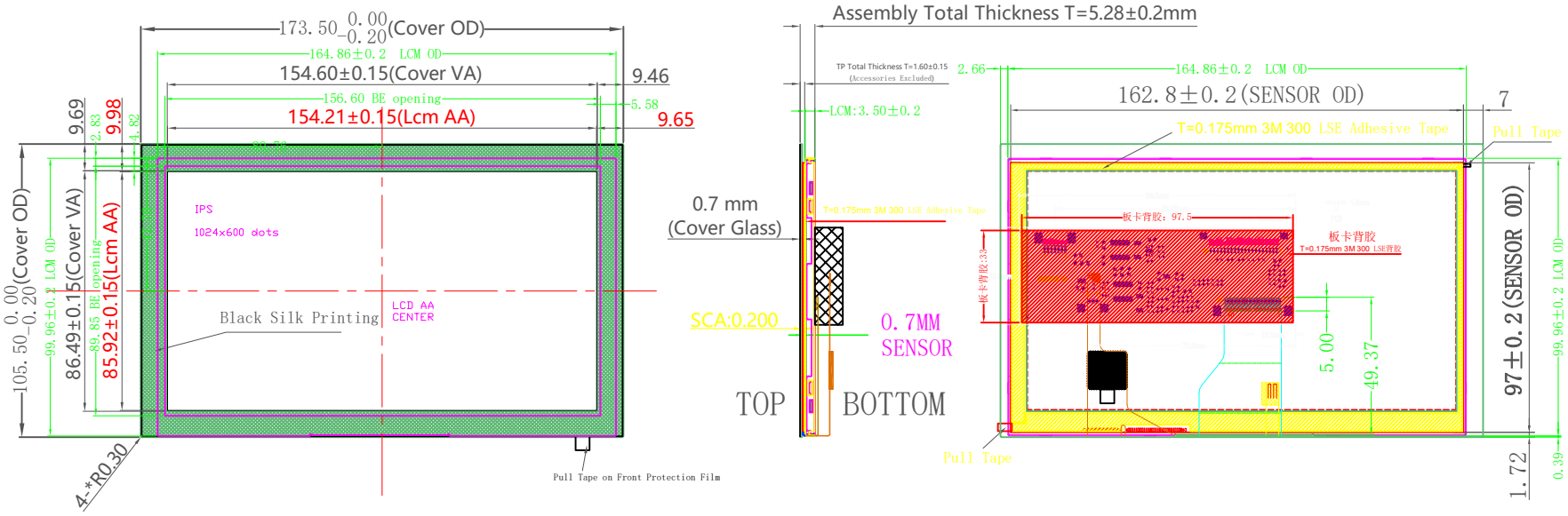

(Assembly Drawing of LCM+TP Adhesive Bonding)

NO.	Pin name	NO.	Pin name
1	VCOM	33	L/R
2	VDD	34	U/D
3	VDD	35	VGL
4	NC	36	NC
5	RESET	37	NC
6	STBYB	38	VGH
7	GND	39	LED+
8	Rin0-	40	LED+
9	Rin0+		
10	GND		
11	Rin1-		
12	Rin1+		
13	GND		
14	Rin2-		
15	Rin2+		
16	GND		
17	Rclkin-		
18	Rclkin+		
19	GND		
20	Rin3-		
21	Rin3+		
22	GND		
23	NC		
24	NC		
25	GND		
26	NC		
27	NC		
28	SELB		
29	AVDD		
30	GND		
31	LED-		
32	LED-		

FPC Pin Logics

PIN	Connection
1	GND
2	SCL
3	SDA
4	INT
5	RST
6	NC
7	VDD
8	NC

* Unspecified Tolerances is:±0.2

Note:	
LCD TYPE	7 inch TFT Transmissive
DISPLAY MODE	Normally black
VIEW DIRECTION	All viewing angle
OPERATING TEMP.	-10° C ~ 50° C
STORAGE TEMP.	-20° C ~ 60° C
BACK LIGHT	27 White leds
BL voltage/current	9.6V / 180mA
ALL MATERIALS MUST BE ROHS COMPLIANT	

Technical Parameters:
1. GLASS+SCA+GlassITO+FPC
2. GG/COF Structure:FT5426
3. Glass Material:Asahi Glass
4. Glass Transparency:≥85%
5. Glass Surface Hardness:≥6H
6. TP Working Environment:-10℃~+60℃, ≤90%RH
7. TP Storage Environment:-20℃~+70℃, ≤90%RH
8. ROHS Compliant
9. Unmarked Tolerance±0.2mm

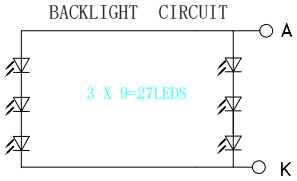

MAXEN Custom LCD Display

物料	NO.	更改内容	日期
	1		
	2		
	3		
	4		
	5		
	6		
	7		

工 程 确 认 图

方向		
绘图	审核	日期
		20211123

MAXEN ELECTRONICS LIMITED

公司编号	MX-B70HL40-IX20PB	未注公差	±0.20
客户编号		单位	mm
版本号		比例	1 : 1